CORVEX
HYDRAULIC VALVES

PRODUCT CATALOGUE

NINGBO CORVEX HYDRAULIC CO., LTD.

Hydraulic Valves & Manifold Systems 2026

Solenoid, manual, pressure and flow control valves, sandwich stacks, screw-in cartridges and custom manifold blocks. Built in Ningbo since 2006, exported to 46 countries.

CXE CXM CXR CXP CXF CXS CXC CXB

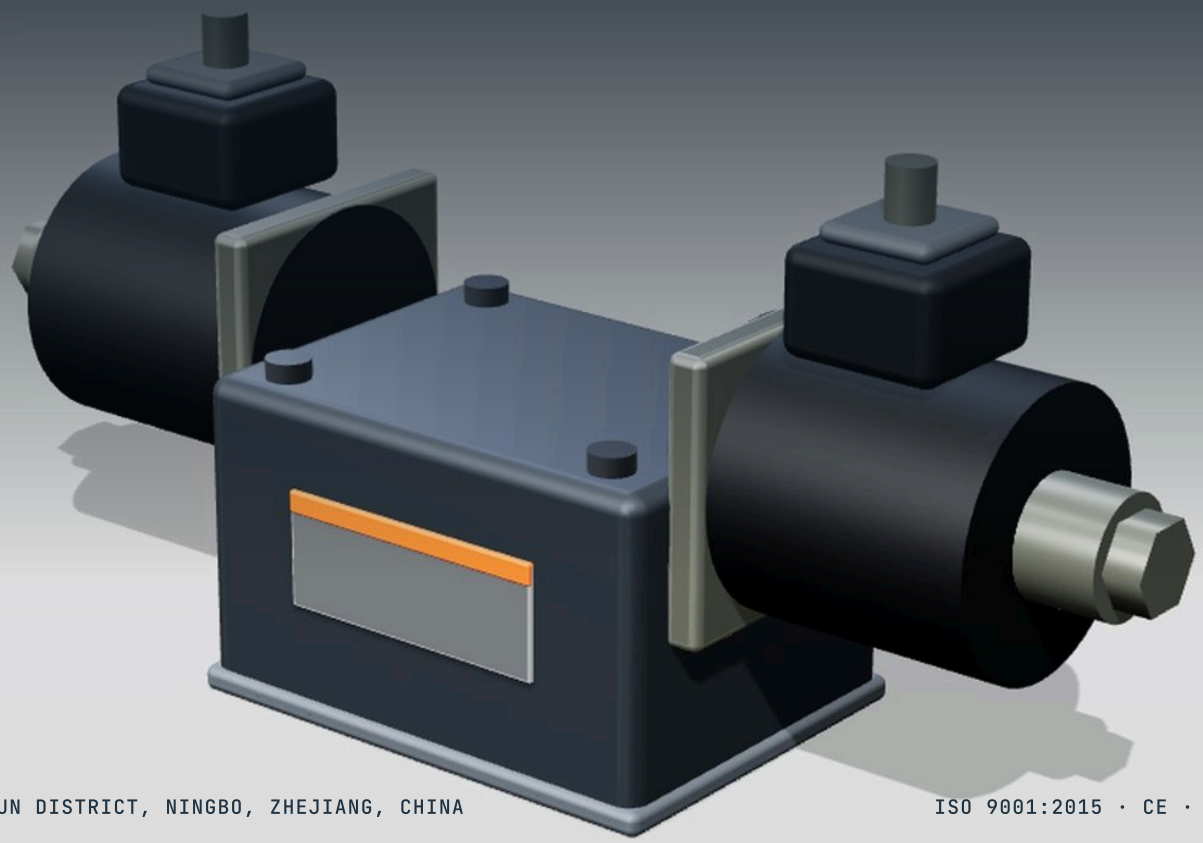

BEILUN DISTRICT, NINGBO, ZHEJIANG, CHINA

ISO 9001:2015 · CE · RoHS

CONTENTS

What is inside

Company	Ningbo Corvex Hydraulic Co., Ltd.	03
CXE	Solenoid Directional Valves	04
CXM / CXMB	Manual Directional Valves	06
CXR	Relief Valves	08
CXP	Pressure Reducing Valves	09
CXF	Throttle Check Valves	10
CXS	Sandwich Modular Valves	11
CXC	Screw-in Cartridge Valves	12
CXB	Custom Manifold Blocks	14
Quality	Quality and Testing	15
Order	Ordering and Contact	16

Lead times at a glance. Stocked standard valves 7 days. Regular orders 25-30 days. Custom manifold blocks 35-45 days. Every product carries an 18-month warranty.

COMPANY

Valves built in Ningbo since 2006

Ningbo Corvex Hydraulic Co., Ltd. started in 2006 as a hydraulic power unit repair shop. In 2009 we began making our own valves, and today about 600,000 leave the plant every year. We sell to construction and agricultural machinery builders, power unit integrators and hydraulic distributors.

2006
founded in Beilun, Ningbo

16,000 m²
two plant buildings

180
people, 22 of them engineers

600,000
valves a year

42
CNC machines, 6 horizontal machining centers

4
honing machines

2
Zeiss coordinate measuring machines

12
factory test benches





Who we supply

Construction and agricultural machinery OEMs, hydraulic power unit (HPU) integrators and hydraulic parts distributors. 70% of revenue is export, to 46 countries. Main markets: Italy, Germany, Poland, Turkey, USA, Brazil, Indonesia and Vietnam.

What we make

Solenoid and manual directional valves, relief, reducing and throttle check valves, sandwich stacks, screw-in cartridges and manifold blocks in aluminium 6061-T6 and ductile iron QT500. Coils are wound in our own plant.

Certified. ISO 9001:2015, CE declaration of conformity, RoHS. Every valve carries an 18-month warranty.

CXE SERIES

Solenoid Directional Valves

CETOP 3 / NG6 and CETOP 5 / NG10, ISO 4401 mounting

The CXE series is our everyday workhorse for mobile machines, hydraulic power units and presses. Four spool functions in two sizes, one coil family, and the 24VDC versions sit in stock.



315	80 / 120	7	18
bar max pressure	L/min, NG6 / NG10	days, stocked 24VDC	months warranty

Key features

- Sub-plate or manifold mounting to ISO 4401, CETOP 3 / NG6 and CETOP 5 / NG10
- Coils wound in our own plant: DC12/24V and AC110/220V, DIN 43650 connector
- 24VDC versions stocked, ship in 7 days; other voltages and float spool 25-30 days
- Operating pressure up to 315 bar, flow up to 80 L/min (NG6) and 120 L/min (NG10)
- Four spool functions: 2-position spring offset, 3-position closed center, float, tandem/Y
- Seals from NOK and Hallite, valves tested on our factory test benches before shipment

Typical applications. Excavators and loaders, forklifts, agricultural machines, hydraulic power units, presses and injection molding machines.

HOW TO ORDER		CXE-03-3C-D24
CXE	**Series**	Solenoid directional valve
03	**Size**	03 = CETOP 3 / NG6, 05 = CETOP 5 / NG10
3C	**Spool**	2D spring offset, 3C closed center, 3H float, 3Y tandem/Y
D24	**Coil**	D12 = DC12V, D24 = DC24V, A110 = AC110V, A220 = AC220V

Specifications

MODEL	FUNCTION	SIZE	BAR	L/MIN	KG	LEAD TIME
CXE-03-2D	Solenoid directional valve, 2-position spring offset	CETOP 3 / NG6	315	80	1.6	7 days
CXE-03-3C	Solenoid directional valve, 3-position closed center	CETOP 3 / NG6	315	80	1.6	7 days
CXE-03-3H	Solenoid directional valve, 3-position float (all to tank)	CETOP 3 / NG6	315	80	1.6	25-30 days
CXE-03-3Y	Solenoid directional valve, 3-position tandem/Y center	CETOP 3 / NG6	315	80	1.6	7 days
CXE-05-2D	Solenoid directional valve, 2-position spring offset	CETOP 5 / NG10	315	120	3.9	7 days
CXE-05-3C	Solenoid directional valve, 3-position closed center	CETOP 5 / NG10	315	120	3.9	7 days
CXE-05-3H	Solenoid directional valve, 3-position float (all to tank)	CETOP 5 / NG10	315	120	3.9	25-30 days
CXE-05-3Y	Solenoid directional valve, 3-position tandem/Y center	CETOP 5 / NG10	315	120	3.9	7 days

Spool functions

SPOOL	FUNCTION	STOCK STATUS
2D	2-position, spring offset	7 days in 24VDC
3C	3-position, closed center	7 days in 24VDC
3H	3-position, float (all ports to tank)	Made to order, 25-30 days
3Y	3-position, tandem/Y center	7 days in 24VDC

Coil options

COIL	VOLTAGE	LEAD TIME
D24	24 VDC	7 days (stocked)
D12	12 VDC	25-30 days
A110	110 VAC	25-30 days
A220	220 VAC	25-30 days

Ordering note. Standard connector: DIN 43650. Coil wound in house. Standard 24VDC valves ship from stock in 7 days. Float spool (3H) and non-24VDC coils are made to order in 25-30 days.

Need a quote or a drawing?
Reply within 12 hours on working days.

sales@corvex-hydraulic.example
+86 574 0000 0000

CXM SERIES

Manual Directional Valves

CXM lever valves, CETOP 3 / 5, and CXMB sectional multi-way valves

CXM lever-operated valves for sub-plate mounting, plus CXMB sectional multi-way valves for small loaders and agricultural machines. Simple, robust, and stocked in standard sizes.

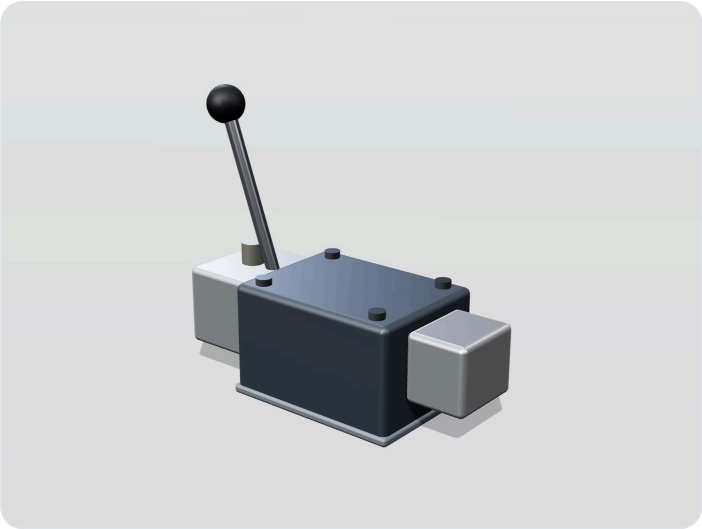

315	210	1 to 8	7
bar, CXM	bar, CXMB	sections, CXMB	days, CXM stocked

Key features

- CXM-03 and CXM-05 lever valves to ISO 4401, CETOP 3 / NG6 and CETOP 5 / NG10
- CXMB sectional valves in 1 to 8 sections, 40 L/min (G3/8) and 80 L/min (G1/2)
- Joystick cable option on CXMB-80 for remote operation
- Spring return or detent lever; spool options D, E, Y, J
- Built-in main relief valve on every CXMB, working pressure up to 210 bar
- CXMB made to order, 25-30 days; CXM stocked, 7 days

Typical applications. Small loaders, tractors and agricultural implements, log splitters, hydraulic power units with manual control.

HOW TO ORDER — CXM-03-D-SR / CXMB-80-3

CXM	**Series**	Manual directional valve (CXMB for sectional multi-way)
03	**Size**	03 = CETOP 3 / NG6, 05 = CETOP 5 / NG10. CXMB: 40 or 80 L/min
D	**Spool**	D, E, Y or J. CXMB: number of sections, 1 to 8
SR	**Lever**	SR = spring return, DT = detent

CXM lever valves

MODEL	FUNCTION	SIZE	BAR	L/MIN	KG	LEAD TIME
CXM-03	Manual directional valve, lever operated, 4/3	CETOP 3 / NG6	315	80	1.2	7 days
CXM-05	Manual directional valve, lever operated, 4/3	CETOP 5 / NG10	315	120	2.8	7 days

CXMB sectional multi-way valves

MODEL	MAX BAR	L/MIN	PORT	1	2	3	4	5	6	7	8
CXMB-40	210	40	G3/8	1.5	2.4	3.3	4.2	5.1	6.0	6.9	7.8
CXMB-80	210	80	G1/2	2.3	3.6	5.0	6.4	7.7	9.1	10.4	11.8

Columns 1 to 8 show weight in kg by number of sections. All CXMB: 25-30 days.

Ordering note. CXMB: built-in main relief, joystick cable option on CXMB-80. Spool options D, E, Y, J on CXM. Tell us the machine and the number of functions and we will propose the section count.

Need a quote or a drawing?
Reply within 12 hours on working days.

sales@corvex-hydraulic.example
+86 574 0000 0000

CXR SERIES

Relief Valves

Direct acting and pilot operated, up to 350 bar

Direct acting relief valves for small flows and pilot operated relief valves up to 300 L/min. Threaded in-line bodies, with a vent port on the pilot operated types for remote control.



350	30 to 300	5	7
bar max pressure	L/min flow range	models	days, stocked sizes

Key features

- Direct acting CXR-D in G1/4 and G3/8, adjustment range 10-350 bar
- Vent port on pilot operated valves for remote control or unloading
- In-line threaded bodies, simple to pipe into existing circuits
- Pilot operated CXR-P in G1/2, G3/4 and G1, adjustment range 20-350 bar
- Adjusting screw or knob on direct acting valves
- G1/2 pilot operated and both direct acting sizes stocked, 7 days

Specifications

MODEL	TYPE	PORT	BAR	L/MIN	KG	LEAD TIME
CXR-D-03	Direct acting relief valve	G1/4	350	30	0.5	7 days
CXR-D-04	Direct acting relief valve	G3/8	350	60	0.7	7 days
CXR-P-10	Pilot operated relief valve	G1/2	350	100	1.4	7 days
CXR-P-20	Pilot operated relief valve	G3/4	350	200	2.6	25-30 days
CXR-P-30	Pilot operated relief valve	G1	350	300	4.2	25-30 days

HOW TO ORDER — **CXR-P-10-S-250**

CXR	**Series**	Relief valve
P	**Type**	D = direct acting, P = pilot operated
10	**Size**	D: 03 (G1/4), 04 (G3/8). P: 10 (G1/2), 20 (G3/4), 30 (G1)
S-250	**Adjuster, setting**	S = screw, K = knob (direct acting only), then set pressure in bar

Note. Specify the required set pressure when ordering.

CXP SERIES

Pressure Reducing Valves

Pilot operated, CETOP 3 / NG6 and CETOP 5 / NG10

Pilot operated pressure reducing valves for sub-plate and manifold mounting. Use them to hold a secondary circuit, such as a clamp or a brake, at a steady lower pressure.

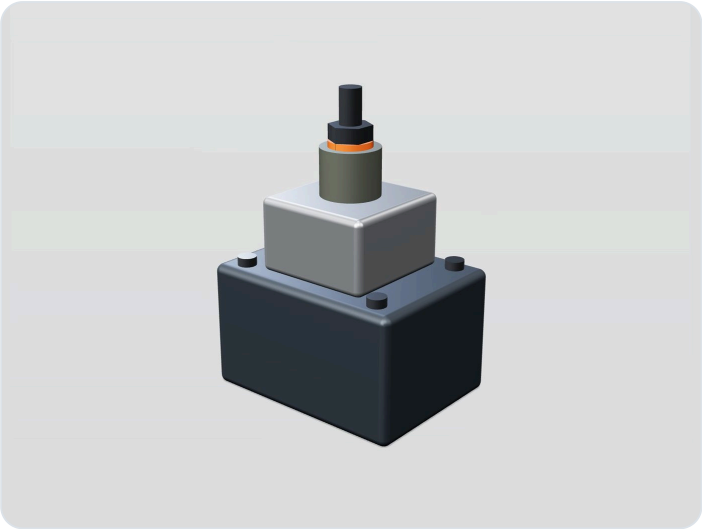

315	10-210	40 / 80	25-30
bar inlet pressure	bar reduced range	L/min, NG6 / NG10	days lead time

Key features

- Pilot operated design for stable reduced pressure
- Sub-plate and manifold mounting to ISO 4401
- Also available as modular valves in the CXS sandwich series
- Reduced pressure range 10-210 bar
- CETOP 3 / NG6 up to 40 L/min, CETOP 5 / NG10 up to 80 L/min
- Lead time 25-30 days

Specifications

MODEL	TYPE	SIZE	BAR	L/MIN	KG	LEAD TIME
CXP-03	Pilot operated pressure reducing valve	CETOP 3 / NG6	315	40	1.3	25-30 days
CXP-05	Pilot operated pressure reducing valve	CETOP 5 / NG10	315	80	2.7	25-30 days

HOW TO ORDER		CXP-03-100
CXP	**Series**	Pressure reducing valve, pilot operated
03	**Size**	03 = CETOP 3 / NG6, 05 = CETOP 5 / NG10
100	**Setting**	Reduced pressure in bar, 10 to 210

Note. Specify the reduced pressure setting when ordering.

CXF SERIES

Throttle Check Valves

Modular stack type and in-line, up to 315 bar

Adjustable throttle with a free-flow check in one direction. The stack type sits between a directional valve and its sub-plate; the in-line type screws into the pipe.

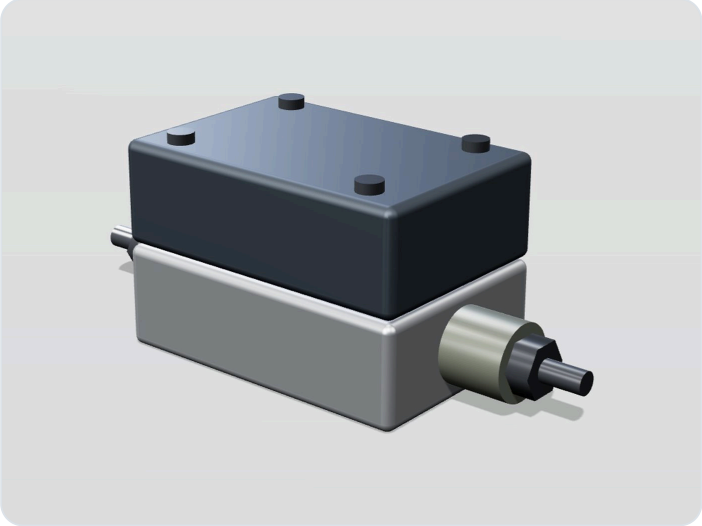

315	40-100	4	25-30
bar max pressure	L/min flow range	models	days lead time

Key features

- Stack type CXF-S: CETOP 3 / NG6 and CETOP 5 / NG10, meter-in or meter-out
- In-line type CXF-L: G1/4 and G1/2
- Up to 315 bar on all models
- A line or B line versions to match the actuator
- Free flow in one direction, adjustable throttle in the other
- Lead time 25-30 days

Specifications

MODEL	TYPE	SIZE	BAR	L/MIN	KG	LEAD TIME
CXF-03-S	Check-throttle valve, modular stack type	CETOP 3 / NG6	315	60	0.9	25-30 days
CXF-05-S	Check-throttle valve, modular stack type	CETOP 5 / NG10	315	100	2.0	25-30 days
CXF-03-L	Check-throttle valve, in-line	G1/4	315	40	0.4	25-30 days
CXF-05-L	Check-throttle valve, in-line	G1/2	315	90	0.9	25-30 days

HOW TO ORDER		CXF-03-S-MI-A
CXF	**Series**	Check-throttle valve
03	**Size**	03 = CETOP 3 / NG6, 05 = CETOP 5 / NG10 (S type); 03 = G1/4, 05 = G1/2 (L type)
S	**Type**	S = modular stack, L = in-line
MI-A	**Function, line**	MI = meter-in, MO = meter-out, then A or B line (S type only)

Note. L type is in-line threaded and takes no function or line code.

CXS SERIES

Sandwich Modular Valves

CETOP 3 / 5 stack valves: check, relief, reducing, throttle

A full stack set for CETOP 3 and 5 manifolds. Build the circuit between the directional valve and the sub-plate instead of drilling more manifold.

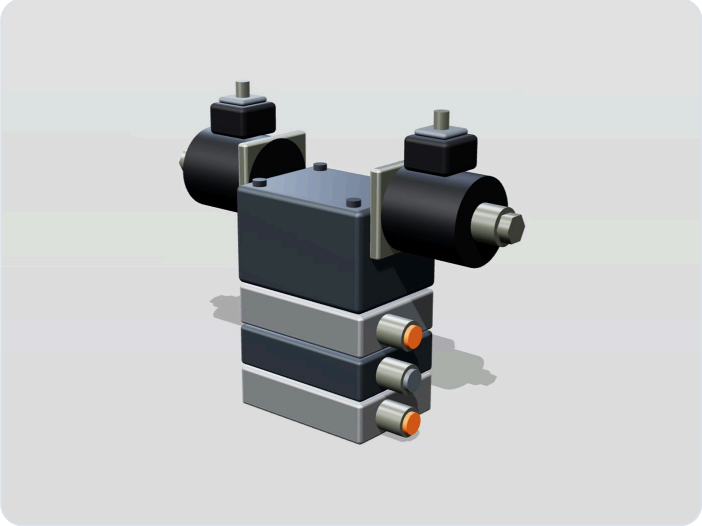

315	60 / 100	10	7
bar max pressure	L/min, NG6 / NG10	models	days, stocked

Key features

- Single check, pilot operated check (A or B), relief (A/B/P), pressure reducing, dual throttle
- Full CETOP stack set available for both sizes
- Keep stack height within your manifold limit; our engineers can check it
- CETOP 3 / NG6 up to 60 L/min and CETOP 5 / NG10 up to 100 L/min
- Check, pilot check and relief in NG6, and the NG6 single check, are stocked at 7 days
- Mounts directly under CXE solenoid valves

Specifications

MODEL	FUNCTION	SIZE	BAR	L/MIN	KG	LEAD TIME
CXS-03-SV	Modular single check valve	CETOP 3 / NG6	315	60	0.6	7 days
CXS-03-PC	Modular pilot operated check valve, A or B	CETOP 3 / NG6	315	60	0.9	7 days
CXS-03-RV	Modular relief valve, A/B/P line	CETOP 3 / NG6	315	60	1.0	7 days
CXS-03-PR	Modular pressure reducing valve	CETOP 3 / NG6	315	60	1.0	25-30 days
CXS-03-DT	Modular dual throttle valve	CETOP 3 / NG6	315	60	0.8	25-30 days
CXS-05-SV	Modular single check valve	CETOP 5 / NG10	315	100	1.3	25-30 days
CXS-05-PC	Modular pilot operated check valve, A or B	CETOP 5 / NG10	315	100	1.9	25-30 days
CXS-05-RV	Modular relief valve, A/B/P line	CETOP 5 / NG10	315	100	2.0	25-30 days
CXS-05-PR	Modular pressure reducing valve	CETOP 5 / NG10	315	100	2.1	25-30 days
CXS-05-DT	Modular dual throttle valve	CETOP 5 / NG10	315	100	1.7	25-30 days

HOW TO ORDER		CXS-03-PC-A
CXS	**Series**	Sandwich modular valve
03	**Size**	03 = CETOP 3 / NG6, 05 = CETOP 5 / NG10
PC	**Function**	SV single check, PC pilot check, RV relief, PR reducing, DT dual throttle
A	**Line**	A or B for the pilot operated check (PC)

Note. Total stack height must stay within the limit of the customer manifold.

CXC SERIES

Screw-in Cartridge Valves

SAE-08 / 10 / 12 and M20 cavities, up to 350 bar

Our lead line. Relief, check, counterbalance and solenoid poppet cartridges in three SAE sizes and M20 × 1.5. Pair them with a CORVEX custom manifold and ship one tested unit.



350	24-80	16	7
bar max pressure	L/min flow range	models	days, SAE-10 and 12 R/C

Key features

- Relief (direct acting, 3 port), check (poppet), counterbalance (3:1), 2/2 solenoid poppet (normally closed)
- Up to 350 bar, flow 24-80 L/min depending on size
- NBR seals standard, Viton optional on counterbalance; tamper proof cap on request
- Cavities: SAE-08 (3/4-16 UNF), SAE-10 (7/8-14 UNF), SAE-12 (1 1/16-12 UN), M20 × 1.5
- Solenoid poppet: zero leakage, DC12/24V coil wound in house, manual override optional
- SAE-10 and SAE-12 relief and check valves stocked, 7 days

Typical applications. Mobile hydraulics, lifting and load holding, hydraulic power units, any custom manifold from our block range.

HOW TO ORDER		CXC-10-S-N-D24
CXC	**Series**	Screw-in cartridge valve
10	**Cavity**	08 = SAE-08, 10 = SAE-10, 12 = SAE-12, M20 = M20 × 1.5
S	**Function**	R relief, C check, B counterbalance 3:1, S 2/2 solenoid poppet
N	**Seal**	N = NBR standard, V = Viton (counterbalance)
D24	**Coil**	S type only: D12 or D24

Specifications

MODEL	TYPE	CAVITY	BAR	L/MIN	KG	LEAD TIME
CXC-08-R	Cartridge relief valve, direct acting, 3 port	SAE-08 (3/4-16 UNF)	350	30	0.12	25-30 days
CXC-08-C	Cartridge check valve, poppet	SAE-08 (3/4-16 UNF)	350	30	0.12	25-30 days
CXC-08-B	Cartridge counterbalance valve, 3:1 ratio	SAE-08 (3/4-16 UNF)	350	24	0.12	25-30 days
CXC-08-S	Cartridge 2/2 solenoid poppet valve, normally closed	SAE-08 (3/4-16 UNF)	350	30	0.2	25-30 days
CXC-10-R	Cartridge relief valve, direct acting, 3 port	SAE-10 (7/8-14 UNF)	350	40	0.2	7 days
CXC-10-C	Cartridge check valve, poppet	SAE-10 (7/8-14 UNF)	350	40	0.2	7 days
CXC-10-B	Cartridge counterbalance valve, 3:1 ratio	SAE-10 (7/8-14 UNF)	350	32	0.2	25-30 days
CXC-10-S	Cartridge 2/2 solenoid poppet valve, normally closed	SAE-10 (7/8-14 UNF)	350	40	0.28	25-30 days
CXC-12-R	Cartridge relief valve, direct acting, 3 port	SAE-12 (1 1/16-12 UN)	350	80	0.35	7 days
CXC-12-C	Cartridge check valve, poppet	SAE-12 (1 1/16-12 UN)	350	80	0.35	7 days
CXC-12-B	Cartridge counterbalance valve, 3:1 ratio	SAE-12 (1 1/16-12 UN)	350	64	0.35	25-30 days
CXC-12-S	Cartridge 2/2 solenoid poppet valve, normally closed	SAE-12 (1 1/16-12 UN)	350	80	0.43	25-30 days
CXC-M20-R	Cartridge relief valve, direct acting, 3 port	M20 × 1.5	350	30	0.15	25-30 days
CXC-M20-C	Cartridge check valve, poppet	M20 × 1.5	350	30	0.15	25-30 days
CXC-M20-B	Cartridge counterbalance valve, 3:1 ratio	M20 × 1.5	350	24	0.15	25-30 days
CXC-M20-S	Cartridge 2/2 solenoid poppet valve, normally closed	M20 × 1.5	350	30	0.23	25-30 days

Pair with a manifold. Cartridges are most often supplied inside a CORVEX custom manifold block (see page 14). Cartridge cavity drawings are available on request.

Need a quote or a drawing?
Reply within 12 hours on working days.

sales@corvex-hydraulic.example
+86 574 0000 0000

CXB CUSTOM MANIFOLD BLOCKS

Manifold blocks, built to your drawing

Aluminium 6061-T6 or ductile iron QT500 blocks up to 600 × 400 mm, machined, deburred and leak tested. Fit them with CXC cartridges and CXE valves from our own range and receive one complete unit.

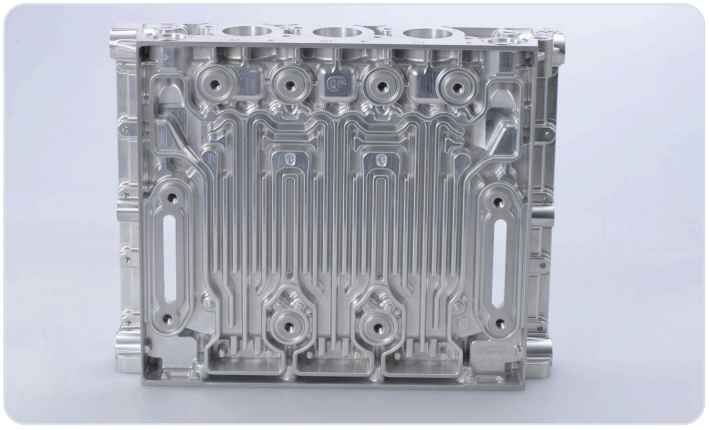

600 x 400	350	50	35-45
mm, largest block	bar, ductile iron QT500	pcs minimum order	days lead time

MODEL	MATERIAL	MAX SIZE	MAX BAR	MOQ	LEAD TIME
CXB-AL	aluminium 6061-T6	Up to 600 × 400 mm	210	50 pcs	35-45 days
CXB-DI	ductile iron QT500	Up to 600 × 400 mm	350	50 pcs	35-45 days

How a project runs

1. **Send a circuit sketch or drawing**
   Hydraulic schematic, cavity list, port sizes, flow and pressure.
2. **Engineering review**
   Our engineers check cavities, wall thickness and port layout.
3. **3D model and quotation**
   Returned within 3 working days.
4. **Sample, then production**
   Sample is charged as a tooling and setup fee. 100% leak test on every block.

Material choice

CXB-AL, aluminium 6061-T6. Up to 210 bar. Light weight, good for mobile machines and compact power packs.

CXB-DI, ductile iron QT500. Up to 350 bar. Use it for higher pressure or heavy duty circuits.

> **OEM program.** Custom manifold blocks start from 50 pcs. OEM branding from 300 pcs.

QUALITY AND TESTING

Measured, tested, then shipped

Valve spools and bores live on microns. We hone bores in house, measure on two Zeiss coordinate measuring machines and pressure test valves on 12 factory test benches before they leave the plant.

1. Material check
2. CNC machining
3. Honing
4. CMM inspection
5. Assembly
6. Test bench
7. Packing

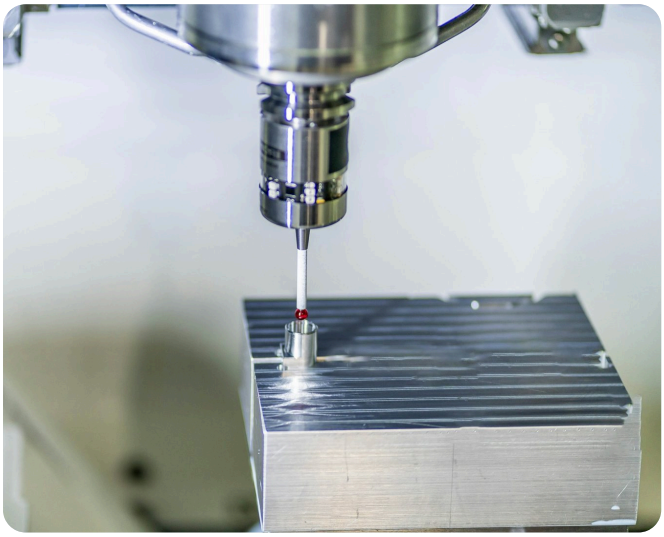



Certifications

STANDARD	SCOPE
ISO 9001:2015	Quality management system, certificate valid, reviewed in 2026
CE	Declaration of conformity for the product range
RoHS	Test report available on request

Equipment

ITEM	QTY
CNC machines	42 (6 horizontal)
Honing machines	4
Zeiss CMM	2
Factory test benches	12

18-month warranty. Material and workmanship, from shipment date. Custom manifold blocks receive a 100% leak test before packing. Certificates and test reports are sent with the order on request.

ORDERING AND CONTACT

Send us your drawing or part number

Tell us the model code, quantity and destination port and we will return a quotation with lead time. For a manifold block, add the circuit sketch.

MOQ	No MOQ on standard valves. Custom manifold blocks from 50 pcs. OEM branding from 300 pcs.
Lead time	Stocked valves 7 days. Regular orders 25-30 days. Custom manifold blocks 35-45 days.
Samples	Standard samples are charged and credited when you order. Custom samples carry a tooling fee.
Payment	30% deposit, 70% before shipment. OA 30 days for returning customers.
Warranty	18 months.
Reply time	Within 12 hours on working days.

EMAIL

sales@corvex-hydraulic.example

PHONE

+86 574 0000 0000

ADDRESS

Ningbo Corvex Hydraulic Co., Ltd.
Beilun District, Ningbo, Zhejiang, China