TECHNICAL DATASHEET

CXS Sandwich Modular Valves

CETOP 3 / 5 stack valves: check, relief, reducing, throttle

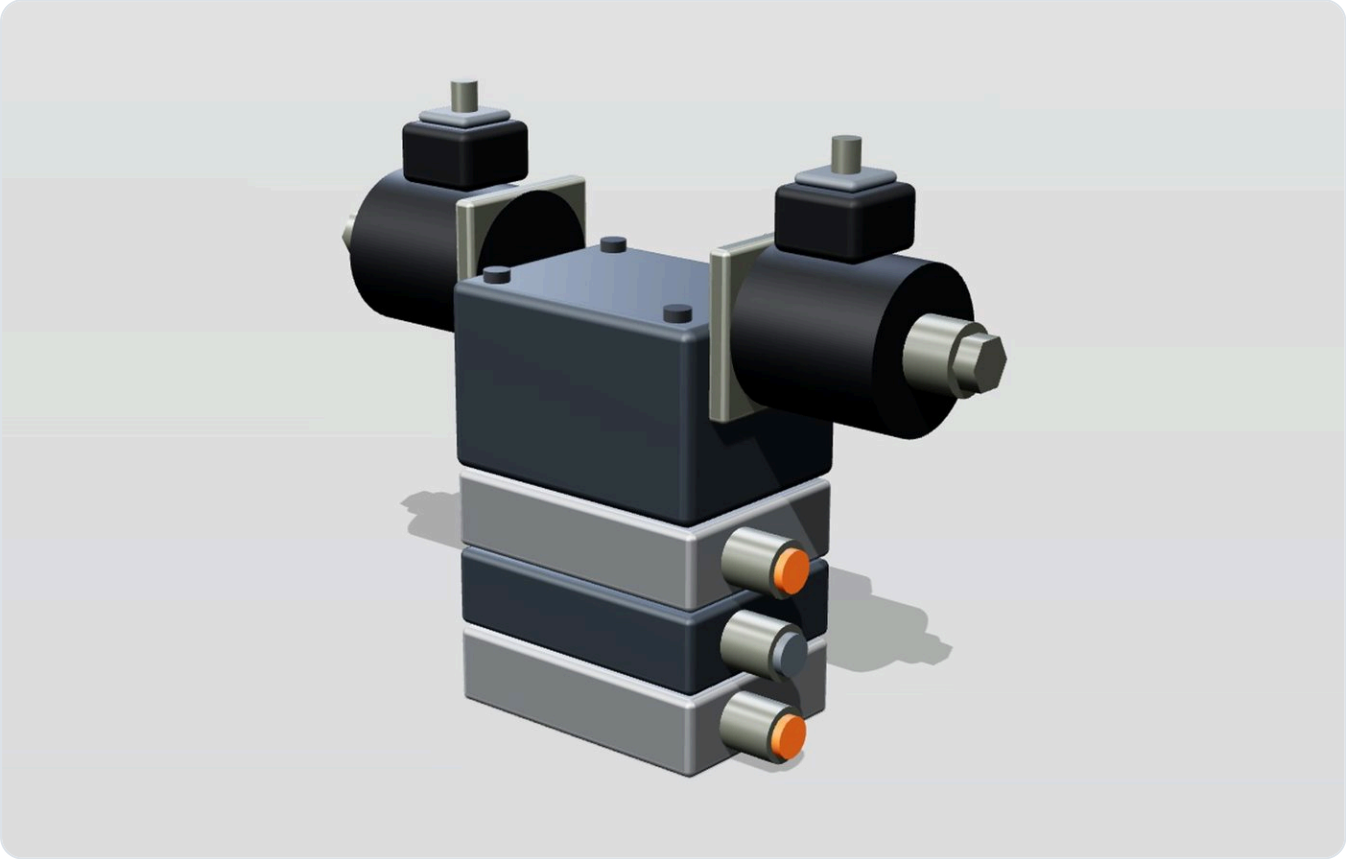

A full stack set for CETOP 3 and 5 manifolds. Build the circuit between the directional valve and the sub-plate instead of drilling more manifold.

315	60 / 100	10	7
bar max pressure	L/min, NG6 / NG10	models	days, stocked

Key features

- Single check, pilot operated check (A or B), relief (A/B/P), pressure reducing, dual throttle
- Full CETOP stack set available for both sizes
- Keep stack height within your manifold limit; our engineers can check it
- CETOP 3 / NG6 up to 60 L/min and CETOP 5 / NG10 up to 100 L/min
- Check, pilot check and relief in NG6, and the NG6 single check, are stocked at 7 days
- Mounts directly under CXE solenoid valves

Typical applications. Compact power packs, mobile manifolds, machine tool clamping, any circuit that needs a check or relief at the valve.

Specifications

MODEL	FUNCTION	SIZE	BAR	L/MIN	KG	LEAD TIME
CXS-03-SV	Modular single check valve	CETOP 3 / NG6	315	60	0.6	7 days
CXS-03-PC	Modular pilot operated check valve, A or B	CETOP 3 / NG6	315	60	0.9	7 days
CXS-03-RV	Modular relief valve, A/B/P line	CETOP 3 / NG6	315	60	1.0	7 days
CXS-03-PR	Modular pressure reducing valve	CETOP 3 / NG6	315	60	1.0	25-30 days
CXS-03-DT	Modular dual throttle valve	CETOP 3 / NG6	315	60	0.8	25-30 days
CXS-05-SV	Modular single check valve	CETOP 5 / NG10	315	100	1.3	25-30 days
CXS-05-PC	Modular pilot operated check valve, A or B	CETOP 5 / NG10	315	100	1.9	25-30 days
CXS-05-RV	Modular relief valve, A/B/P line	CETOP 5 / NG10	315	100	2.0	25-30 days
CXS-05-PR	Modular pressure reducing valve	CETOP 5 / NG10	315	100	2.1	25-30 days
CXS-05-DT	Modular dual throttle valve	CETOP 5 / NG10	315	100	1.7	25-30 days

HOW TO ORDER		CXS-03-PC-A
CXS	**Series**	Sandwich modular valve
03	**Size**	03 = CETOP 3 / NG6, 05 = CETOP 5 / NG10
PC	**Function**	SV single check, PC pilot check, RV relief, PR reducing, DT dual throttle
A	**Line**	A or B for the pilot operated check (PC)

Ordering note. Total stack height must stay within the limit of the customer manifold. Standard terms: no MOQ on standard valves, 18-month warranty, reply within 12 hours on working days.

Need a quote or a drawing?
Reply within 12 hours on working days.

sales@corvex-hydraulic.example
+86 574 0000 0000